SNOWSOUND ART

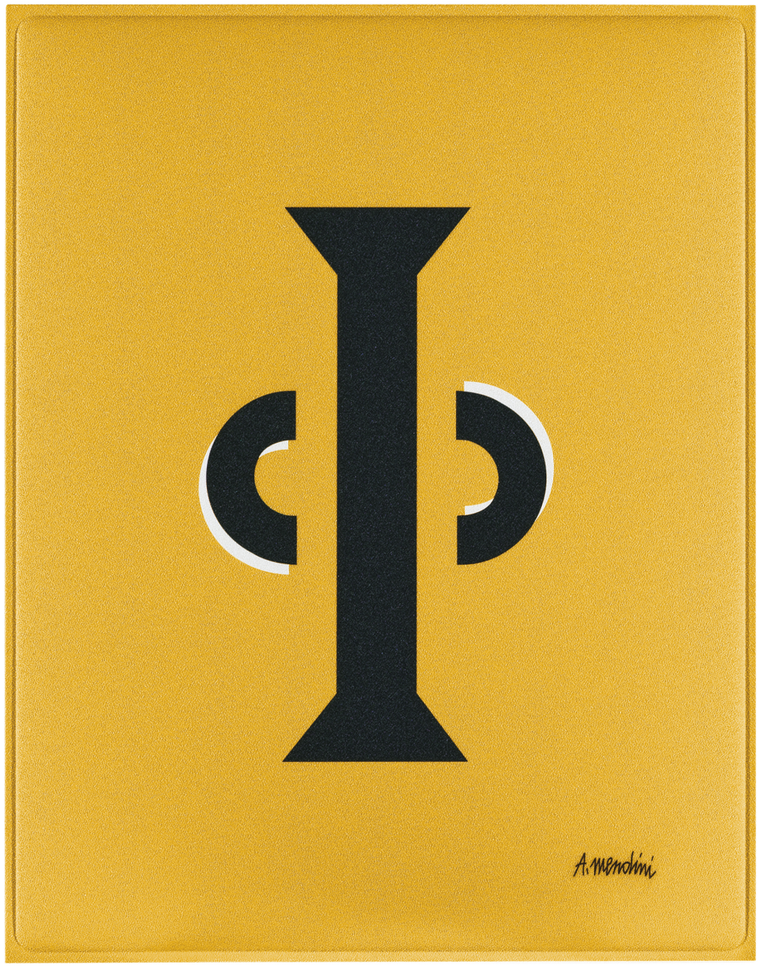

The journey of SNOWSOUND ART began in 2017 with a collection of sound–absorbing panels that serve as 'canvases' featuring a series of drawings by Gillo Dorfles, a renowned painter, art critic, and theorist widely regarded as one of the greatest art scholars. The project continued in 2018 with works by Gio Ponti, a master of Italian and international design and architecture, and in 2019 with Sezgin Aksu, a designer and artist. Aksu was involved in the SNOWSOUND ART project, creating a series of works reproduced on the panels of the Giotto Collection, which he designed. In 2020, Alessandro Mendini's Ideas, Things artwork exemplified the necessity of dialogue between art and industry, serving as a foundation for any mass–produced product.

Specs	Polyester internal padding with Snowsound technology, polyester covering in Trevira CS® fabric
	Single material and 100% recyclable
	Eco friendly – Greenguard Gold
	Durable, tackable double–sided surface
	Patented variable density composition
	Class A sound absorption with NRC 1.0 (ISO 354/ASTM C423/ISO 11654)
	Absorbs 94% of human speech frequencies
	Class A fire and smoke safety (UL 723/ASTM E84)
	CAL 133, 117 pass
	Sleek profile at only 1.4" thick
	Wall mounted
	Ceiling suspended
Artists	Alessandro Mendini, Gillo Dorfles, Gio Ponti, Mario Trimarchi, and Sezgin Aksu

ALESSANDRO MENDINI ART PRINT PANELS

Designer: Alessandro Mendini

23.5"/59 cm

30"/75 cm

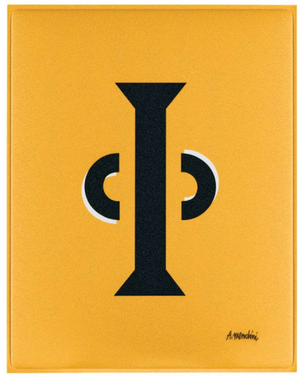

23.5"/59 cm

23.5"/59 cm

47"/119 cm

63"/159 cm

47"/119 cm

63"/159 cm

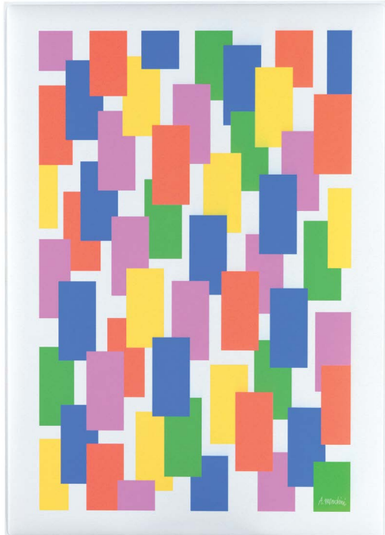

Color	Ollo Part No	Rimatra Part No	Sic Part No	Proust Part No
Sun Yellow	7SME086/OL-3008**			
White Green		7SME066/RI-001**		
White			7SME1216/S-001**	7SME1216/P-0001**

** Extended lead time
Extended lead time colors require: up to 10–12 weeks
Wall mounting brackets and ceiling suspension brackets kit are sold separately. Please refer to p.268

SNOWSOUND ART WALL MOUNTING BRACKETS

Pair of wall brackets come in either in a satin nickel or matte white finish. (Screws to fasten bracket to wall not included).

Panel size	Fits All Sizes	Fits All Sizes
Part No	40025090	40025091
QTY	01 pair	01 pair
Finish	Matte White	Satin Nickel

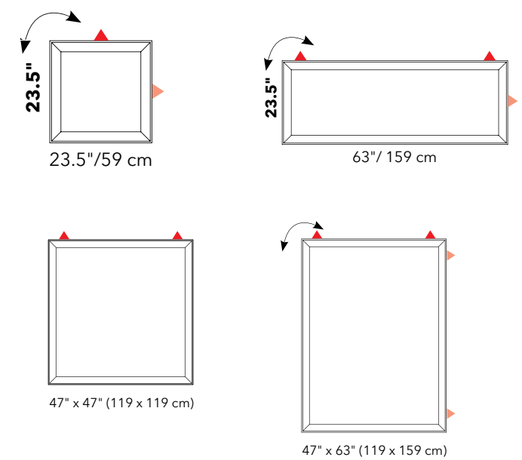

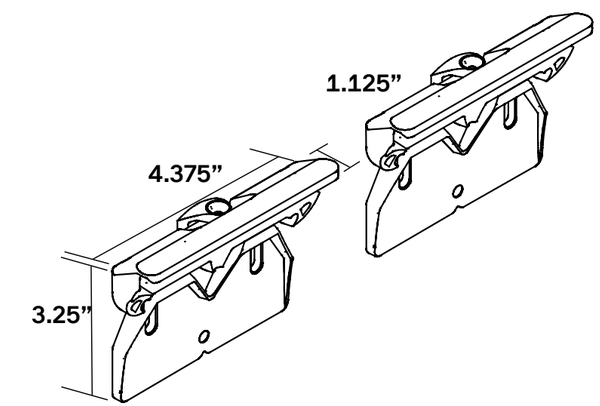

This symbol indicates the number of brackets required to hang panel. Panels can be mounted either horizontally or vertically.

SNOWSOUND ART WALL MOUNTING HANGERS

Hangers come in pairs: some orientations require only 1 Panel Hanger. (Wall mounting screws not included). Panels sold separately.

Panel size	Fits All Sizes
Part No	40025586
QTY	01 Pair
Finish	Matte White

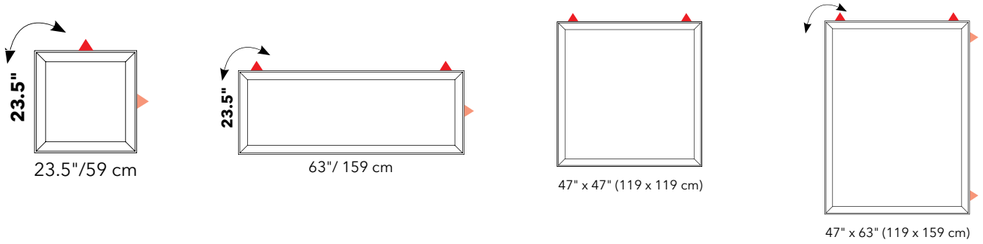

This symbol indicates the number of brackets required to hang panel. Snowsound art panels might only require one bracket.

SNOWSOUND ART 47"X 47" CEILING SUSPENSION COMPLETE KIT

Kit includes	01 Hanging frame
	04 Cables
	04 Panel fasteners
	04 Ceiling plates

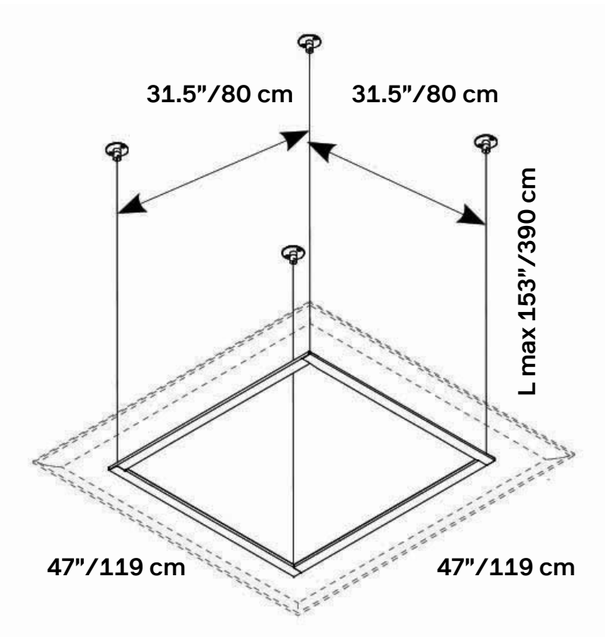

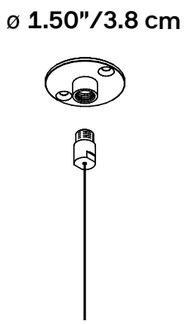

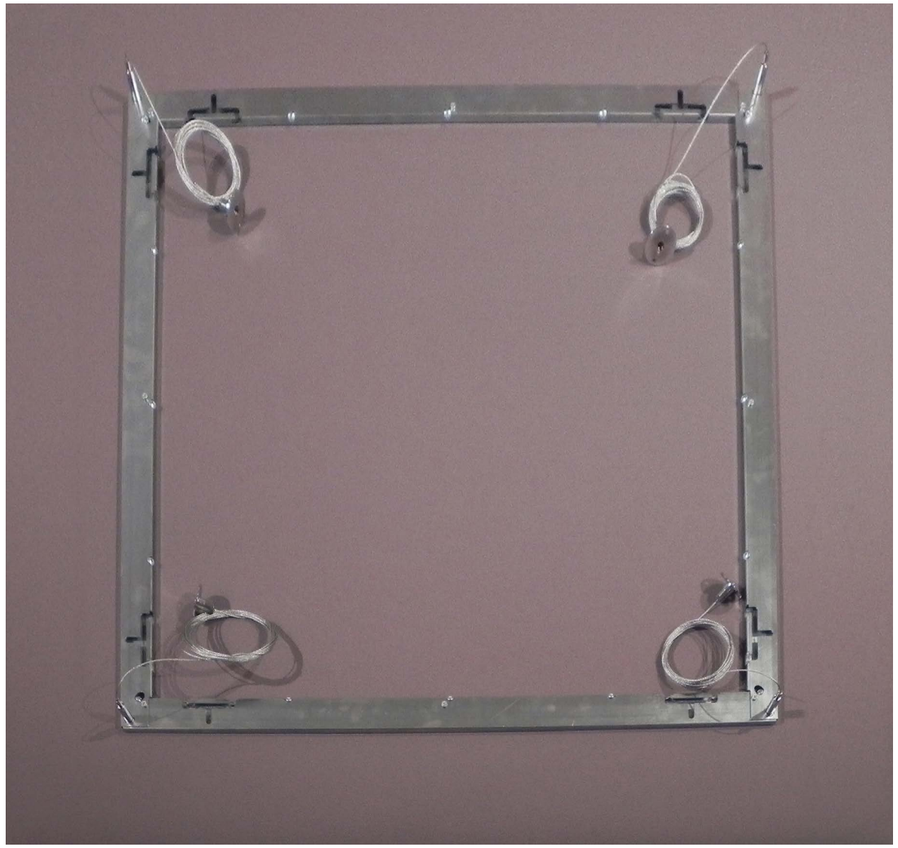

Panel size	47" x 47"
Part No	40025233
QTY	Hardware only
Finish	Metal

SNOWSOUND ART 47"X 63" CEILING SUSPENSION COMPLETE KIT

Kit includes	01 Hanging frames
	04 Cables
	04 Panel fasteners
	04 Ceiling plates

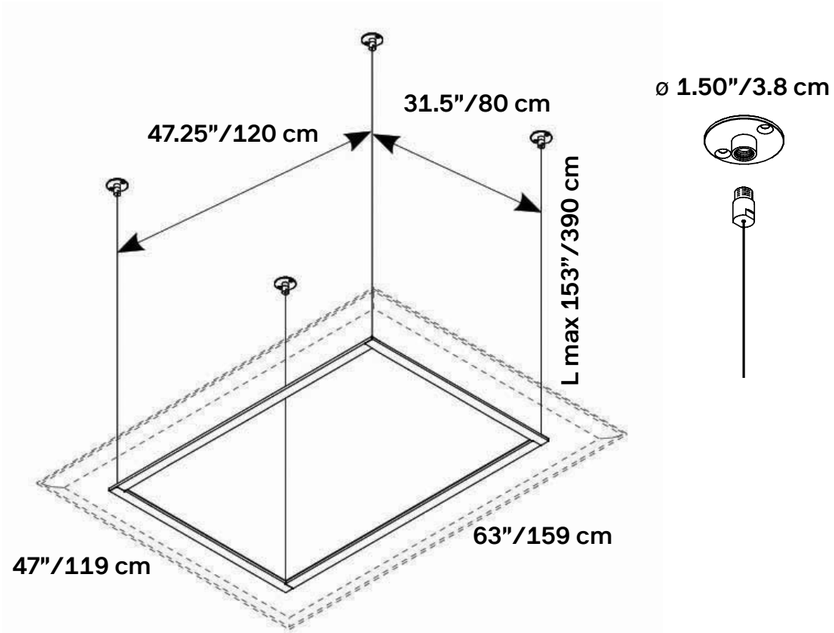

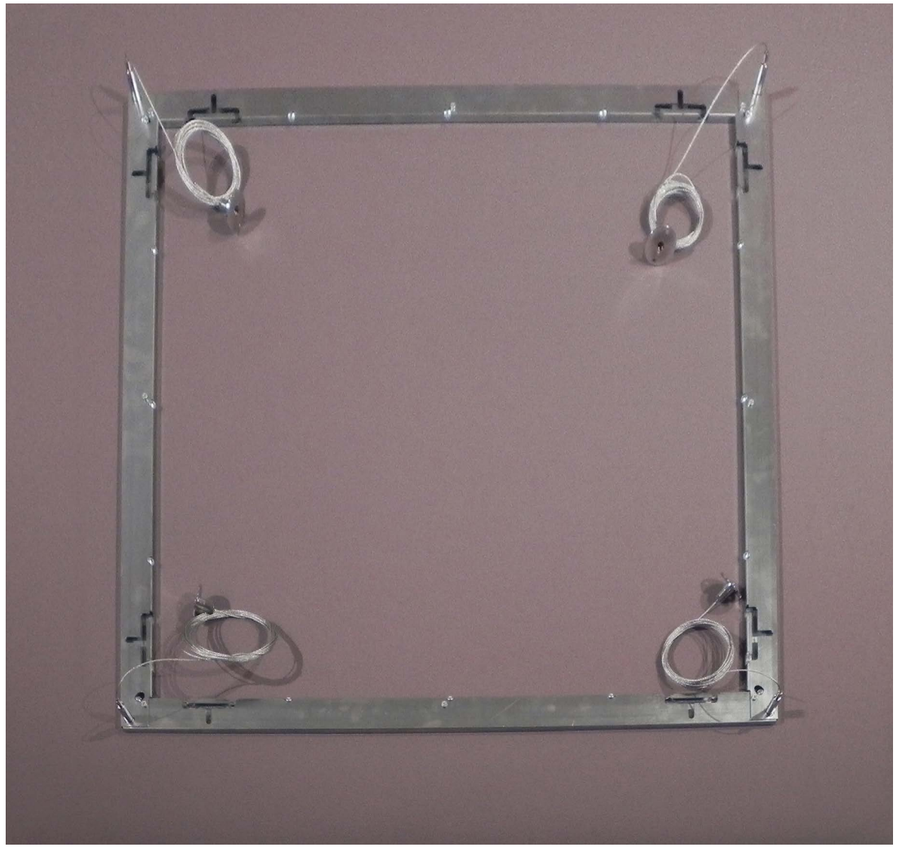

Panel size	47" x 63"
Part No	40025234
QTY	Hardware only
Finish	Metal